get started

INSTANT POT® **RIO™**
MULTI-COOKER

USER MANUAL

Instant Pot®

Welcome

to your new Instant Pot® RIO™!

This Instant Pot RIO Multi-Cooker can help you cook healthy, delicious meals more easily and in less time. We hope you fall in love with Instant Pot cooking and enjoy it in your kitchen for years to come!

Get started with your new Instant Pot!

⚠WARNING

Before using your new appliance, read all instructions, including the Important Safeguards. **Failure to follow the safeguards and instructions may result in personal injury and/or property damage.**

CONTENTS

Important safeguards	2
What's in the box	7
Using your Instant Pot RIO	9
Pressure cooking	19
Sautéing	26
Slow cooking	28
Yogurt	29
Keep warm	32
Cleaning	33
Troubleshooting	35
Replacement parts	38
Learn more	39
Warranty	40

⚠ IMPORTANT SAFEGUARDS

⚠WARNING

Failure to follow safety instructions may result in personal injury and/or property damage and may void your warranty.

READ ALL INSTRUCTIONS

Before using your new appliance, please read all instructions, including the Safety Information below. Keep this manual for reference.

Placement

- **DO** place the appliance on a countertop only. Always operate the appliance on a stable, non-combustible, level surface.
- **DO** make sure all parts are dry and free of food debris before placing the inner cooking pot on the cooker base.
- **DO NOT** place the appliance or power cord on or close to a gas or electric stovetop or oven. **NEVER** use the appliance on your stove.
- **DO NOT** use the appliance near water, an external heat source or flame.
- **DO NOT** use outdoors. Keep out of direct sunlight.
- **DO NOT** place on anything that may block the vents on the bottom of the appliance.

General Use

The removable inner cooking pot is extremely hot during use and can be extremely heavy when full of ingredients.

- **DO** use oven mitts when handling the inner cooking pot and removing accessories.
- **DO** place hot accessories on a heat-resistant surface or cooking plate.
- **DO** use care when lifting the cooking pot from the cooker base to avoid burn injury.
- **DO** use extreme caution when the cooking pot contains hot food, hot oil or other hot liquids.
- **DO** use only the Instant Pot lid that came with this cooker base. Using any other pressure cooker lids may cause personal injury and/or property damage.

⚠WARNING

Failure to follow safety instructions may result in personal injury and/or property damage and may void your warranty.

- **DO NOT** use the appliance without the removable inner cooking pot installed.
- **DO NOT** touch the appliance's hot surfaces, or any accessories during or immediately after cooking because they will be hot. Only use the appliance's side handles for carrying or moving.
- **DO NOT** use this appliance for deep frying or pressure frying with oil.
- **DO NOT** move the appliance while it is in use and use extreme caution when disposing of hot grease.
- **DO NOT** allow children or persons with reduced physical, sensory or mental capabilities or lack of experience and knowledge to operate this appliance. Close supervision is necessary when any appliance is used by or near children and persons with reduced physical, sensory or mental capabilities. Children should not play with this appliance.
- **DO NOT** use the appliance for anything other than household use. It is not intended for commercial use.
- **DO NOT** leave the appliance unattended while in use.
- **DO** allow appliance to cool before putting on or taking off parts.

Pressure Cooking

This appliance cooks under pressure. Allow the appliance to depressurize naturally or release all excess pressure before opening. **Failure to follow these instructions may result in burns, personal injury and/or property damage.**

- **DO** make sure the appliance is properly closed before operating.
- **DO** check that the steam release valve is installed properly.
- **DO** use the pressure cooking lid when pressure cooking.
- **DO** turn the appliance off if steam escapes from the steam release valve and/or float valve in a steady stream for longer than 3 minutes. If steam escapes from the sides of the lid, turn the appliance off. Once steam stops, pressure is released and the cooker has cooled, carefully make sure the sealing ring is properly installed.
- **DO** ensure the sealing ring is in good condition and installed properly.
- **DO** check the steam release valve, steam release pipe, anti-block shield and float valve for clogging before use.
- **DO NOT** remove the pressure cooking lid with unprotected hands.

⚠WARNING

Failure to follow safety instructions may result in personal injury and/or property damage and may void your warranty.

- **DO NOT** attempt to force the lid off the Instant Pot cooker base.
- **DO NOT** move the appliance when it is pressurized.
- **DO NOT** cover or obstruct the steam release valve and/or float valve with cloth or other objects.
- **DO NOT** attempt to open the appliance until it has depressurized, and all internal pressure has been released. Attempting to open the appliance while it is still pressurized may lead to sudden release of hot contents and may cause burns, personal injury and/or property damage.
- **DO NOT** place your face, hands or exposed skin over the steam release valve or float valve when the appliance is in operation or has residual pressure, and do not lean over the appliance when removing the lid.

Overfill During Pressure Cooking

Overfilling may cause a risk of clogging the steam release pipe and valve, developing excess pressure.

- **DO NOT** fill the inner cooking pot over the line labeled 'PC MAX' or 'Max PC Fill'.
- **DO NOT** fill the inner cooking pot over the line labeled '1/2' when cooking foods that expand during cooking such as rice, dried beans or dried vegetables.
- **DO** be aware that certain foods, such as applesauce, cranberries, pearl barley, oatmeal or other cereals, split peas, noodles, macaroni, rhubarb, or spaghetti can foam, froth and sputter, and clog the steam release pipe and valve. **DO NOT** fill the inner cooking pot over the line labeled '1/2' when cooking these foods.
- **DO NOT** place oversized foods into the inner cooking pot as they may cause risk of fire, personal injury and/or property damage.

Accessories

- **DO** use only accessories or attachments authorized by Instant Pot Brands. The use of parts, accessories or attachments not recommended by the manufacturer may cause a risk of electric shock or other personal injury, fire and/or property damage.

⚠WARNING

Failure to follow safety instructions may result in personal injury and/or property damage and may void your warranty.

- **DO** use only an authorized Instant Pot inner cooking pot to reduce the risk of pressure leakage.
- **DO** only replace the sealing ring with an authorized Instant Pot sealing ring to prevent personal injury, property damage, and/or damage to the appliance.
- **DO NOT** use the included accessories in a microwave, toaster oven, convection or conventional oven, on a ceramic, electric or gas cooktop, or with an outdoor grill.

Care and Storage

- **DO** let the appliance cool to room temperature before cleaning or storage.
- **DO NOT** store any materials, other than the inner cooking pot, in the cooker base when not in use.
- **DO NOT** place any combustible materials in the cooker base, such as paper, cardboard, plastic, Styrofoam or wood.

Power Cord

A short power-supply cord is used to reduce the hazards resulting from grabbing, entanglement or tripping. **WARNING:** Hot spilled food can cause serious burns.

- **DO** keep appliance and power cord away from children.
- **DO** disconnect the power cord from the electrical outlet when not
- using the appliance and before cleaning.
- **DO NOT** let the power cord hang over edges of tables or counters.
- **DO NOT** let the power cord touch hot surfaces or open flame, including a stovetop.
- **DO NOT** use below-counter power outlets.
- **DO NOT** use with extension cords, power converters or adapters, timer switches or separate remote-control systems.

This appliance has a 3-prong grounding plug. To reduce the risk of electric shock:

- **ONLY** plug the power cord into a grounded electrical outlet.
- **DO NOT** remove the grounding prong on the electrical plug.

⚠WARNING

Electrical Warning

The cooker base contains electrical components that are an electrical shock hazard. **Failure to follow these instructions may result in electric shock and/or death.**

To protect against electrical shock:

- To disconnect, select **Cancel**, then remove plug from power source. Always unplug when not in use, as well as before adding or removing parts or accessories, and before cleaning. To unplug, grasp the plug and pull from the outlet. **NEVER** pull from the power cord.
- **DO** regularly inspect the appliance and power cord for any signs of damage or fraying.
- **DO NOT** operate the appliance if the power cord or plug is damaged, or after the appliance malfunctions or is dropped or damaged in any manner. For assistance, contact Consumer Care by email at **support@instantpot.com**.
- **DO NOT** attempt to repair, replace or modify components of the appliance, as this may cause electric shock or other personal injury, fire and/or property damage, and will void the warranty. For assistance, contact Consumer Care by email at **support@instantpot.com**.
- **DO NOT** tamper with any of the safety mechanisms, as this may result in personal injury and/or property damage.
- **DO NOT** put liquid or food of any kind into cooker base without the inner cooking pot.
- **DO NOT** immerse the power cord, plug or the appliance in water or other liquid.
- **DO NOT** clean the appliance by rinsing it under a faucet.
- **DO NOT** use the appliance in electrical systems other than 120 V ~ 60 Hz for North America.

SAVE THESE INSTRUCTIONS

⚠WARNING

Failure to follow safety instructions may result in personal injury and/or property damage and may void your warranty.

WHAT'S IN THE BOX

Lid

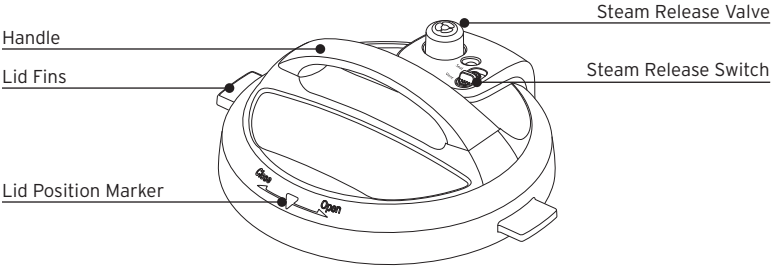

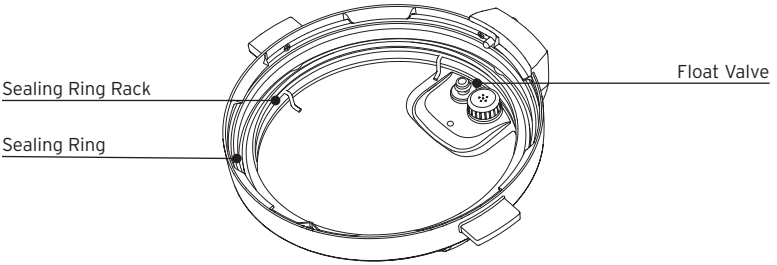

Stainless Steel Cooking Pot

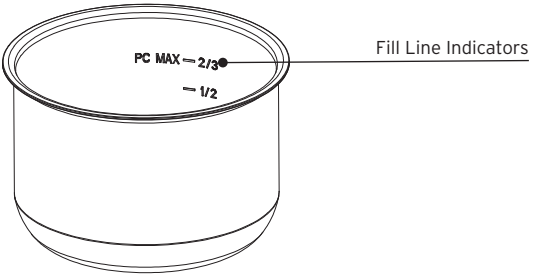

Cooker Base

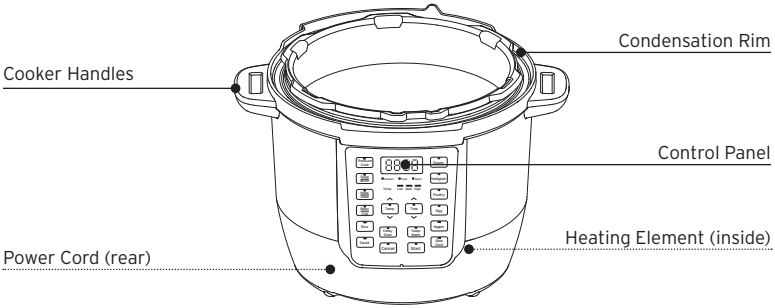

Parts + accessories

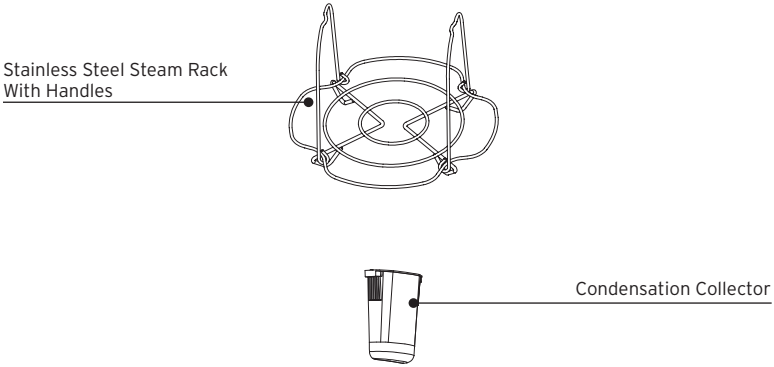

Illustrations are for reference only and may differ from the actual product.

Remember to recycle!

We designed this packaging with sustainability in mind. Please recycle everything that can be recycled where you live.

USING YOUR INSTANT POT RIO

Control panel

We've designed the Instant Pot RIO control panel to be simple to use and easy to read.

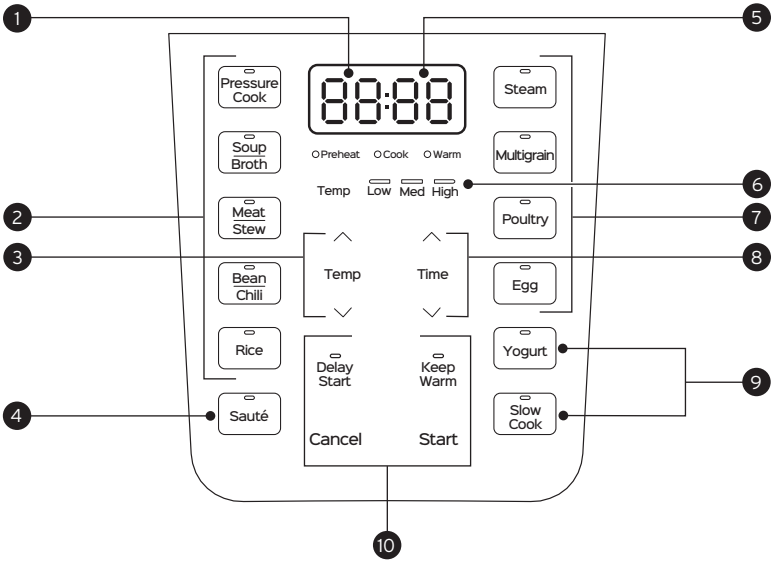

1. Time
   - Cooking time
   - Delay Start time
   - Keep Warm time
2. Pressure Cooking Smart Programs
   - Light shows the active Smart Program
3. Increase/decrease temperature
4. Non-Pressure Cooking Smart Program
   - Light shows the active Smart Program
5. Status Messages
6. Temperature Indicators
7. Non-Pressure Cooking Smart Programs
   - Light shows the active Smart Program
8. Increase/decrease time
9. Non-Pressure Cooking Smart Programs
   - Light shows the active Smart Program
10. Smart Program Settings
    - Delay Start On/Off
    - Keep Warm On/Off
    - Cancel
    - Start

Status messages

The control panel shows information you need to know when using your Instant Pot RIO.

OFF	Standby mode
On	Preheat mode
Lid	Lid not properly secured or missing
05:20	Time • Smart Program: cooking time remaining • Delay Start: time until Smart Program starts • Keep Warm: time food has been warming
boiL	Yogurt Smart Program is in pasteurizing cycle
Hot	Sauté Smart Program is ready to add food
End	Smart Program ended (Keep Warm is off)
Food burn	Overheating: see Troubleshooting
C*	Error: see Troubleshooting

Using the lid

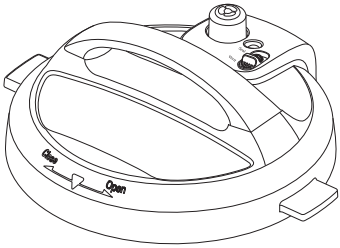

You'll use the pressure cooking lid for most cooking programs, and especially for pressure cooking. Always use the pressure cooking lid that came with this Instant Pot RIO cooker base.

Open the Lid

Turn the lid handle to align the ▼ on the lid with the ⬮ at the side of the control panel.

Lift the lid up and off the cooker base.

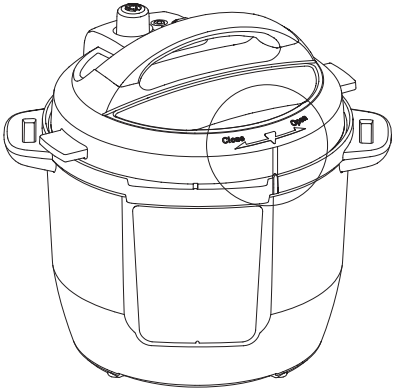

Close the Lid

1. Line up the ▼ on the lid with the ⬮ at the side of the control panel.

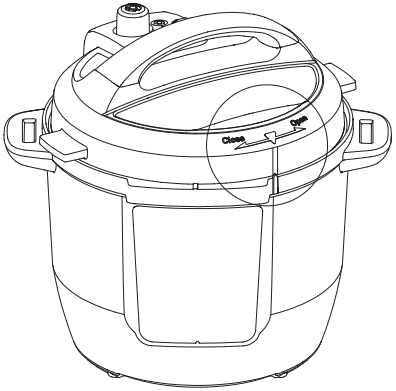

2. Turn the lid clockwise until the ▼ on the lid is centered over the control panel.

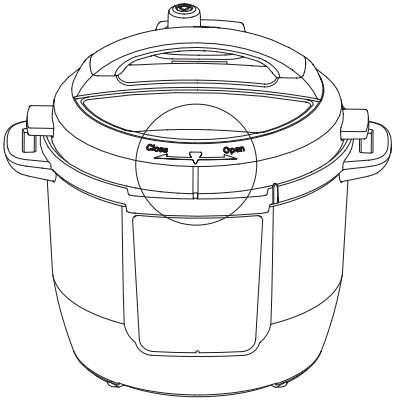

Turning the sound On/Off

Turn sound on

When in Standby mode, press and hold **Delay Start** and **Keep Warm** keys together until display shows **S On**.

Turn sound off

When in Standby mode, press and hold **Delay Start** and **Keep Warm** keys together until display shows **SOFF**.

Audible safety alerts (beeps) cannot be turned off.

Delay the start of cooking

You can set a Delay Start timer for a minimum of 10 minutes or a maximum of 24 hours.

1. Select a Smart Program, adjust the settings as you want, then press **Delay Start**.

   Once Delay Start *has been selected, there is no way to return to the cooking settings. To adjust Smart Program settings, press* **Cancel** *and enter new selections.*

2. When the time field flashes, use the **Time** up/down arrows to adjust the delay time.
3. Delay Start begins automatically and the timer counts down.
4. When Delay Start ends, the Smart Program begins, and the display indicates **On**.

Delay Start is not available with the Sauté or Yogurt Smart Programs.

Reset Smart Programs to original settings

Reset Individual Smart Programs

With the cooker in Standby mode, press and hold one Smart Program button until the cooker returns to Standby and shows **OFF**.

The Smart Program's pressure level, cooking time and temperature are restored to the factory default setting.

Reset All Smart Programs

With the cooker in Standby mode, press and hold **Cancel** until the cooker beeps.

All Smart Program pressure levels, cooking times and temperatures are restored to the factory default setting.

Change the Control Panel display language

You can select the language shown on the Control Panel display. Choose from: English or French.

1. When the display shows **OFF**, press and hold **Start** and **Cancel** for over 3 seconds. The display shows **En Fr**, with the current language blinking.
2. Press **Start** or **Cancel** to select a new language. The selected language blinks.
3. Within 10 seconds, press **Start** and **Cancel** to confirm your selection.

Change the language for Control Panel buttons

Models sold in Canada include a French language overlay. To affix the overlay:

1. Make sure the Control Panel is clean and dry.
2. Peel off the paper backing from the overlay.
3. Attach the overlay to the Control Panel, using these guidelines:
    - Align the overlay shape with the Control Panel shape.
    - Use the Time/Temp display cutout as a guide for placing the overlay.
    - Cover the English text with the French text exactly.
    - Make sure all LED indicator lights are visible with the overlay attached.
    - Place the overlay carefully, since the adhesive is permanent.

INITIAL SETUP

Clean before use

1. Wash the cooking pot with hot water and soap. Rinse and use a soft cloth to dry the outside. Or you can wash the cooking pot in the dishwasher.
2. Wipe the heating element inside the cooker base with a soft cloth to ensure there are no stray packaging particles.

Setting up the condensation collector

The condensation collector sits at the back of the cooker base and accumulates overflow moisture from the condensation rim. It should be installed before cooking, then emptied and rinsed out after each use.

Install the condensation collector

- Align the grooves on the condensation collector with the tabs on the back of the cooker base and slide the condensation collector into place.

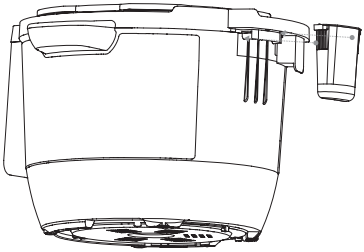

Remove the condensation collector

- Pull the condensation collector away from the cooker base; do not pull down.

  Note the tabs on the cooker base and the grooves on the condensation collector.

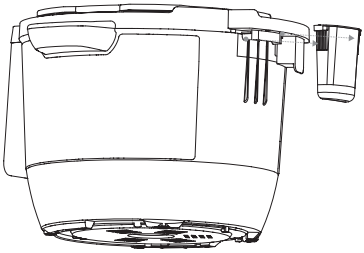

Using the Sealing Ring

When the pressure cooking lid is closed, the sealing ring installed on the underside of the lid creates an air-tight seal between the lid and the cooker base.

- The sealing ring must be installed before using the cooker and should be cleaned after each use.
- Sealing rings stretch over time with normal use. To keep your product safe, replace the sealing ring every 12 to 18 months. Replace sooner if you notice stretching, deformation, or damage.

⚠WARNING

Failure to adhere to safety instructions may result in personal injury and/or property damage and may void your warranty.

Install the Sealing Ring

1. Place the sealing ring over the sealing ring rack and press it into place. Press down firmly to ensure there is no puckering.
2. The sealing ring should be snug and should not fall out when the lid is turned over.

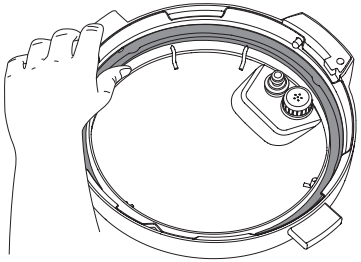

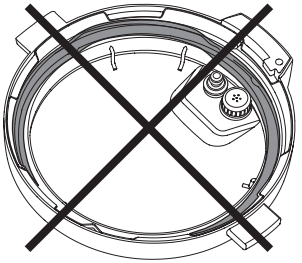

Remove the Sealing Ring

1. Grip the edge of the sealing ring and pull it out from behind the sealing ring rack.
2. Inspect the rack to ensure it is secured, centered, and an even height all the way around the lid. If the sealing ring rack is deformed, do not try to repair it.

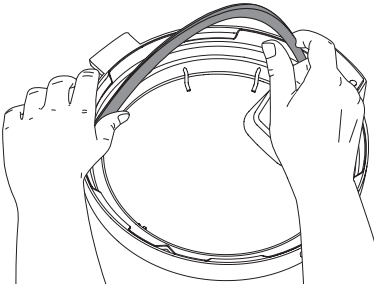

Connect to power

When you're ready to use your Instant Pot, plug the power cord into an electrical outlet. When you're done cooking and whenever you're cleaning the multi-cooker, unplug the cord from the outlet.

Test run

Setting up your new Instant Pot RIO for a test run is a great way to familiarize yourself with how the unit works before you actually cook a meal.

To perform a test run:

1. Follow the instructions for pressure cooking below.
2. Use 3 quarts water, but no food.
3. Set the cooking time to 5 minutes.
4. After the cooking session is done, discard any remaining water.
5. Wash and dry the cooking pot.

   Now you're ready to cook a meal in your Instant Pot RIO!

PRESSURE COOKING

Pressure cooking uses pressurized steam to quickly and evenly cook foods.

How to pressure cook

Prep

Cut, chop, season or marinate your ingredients according to your recipe.

Preheat

1. Place the cooking pot into the cooker base.
2. Add ingredients to the cooking pot.
3. Place the lid on top of the cooking pot and be sure it is locked.

   *See **'How to close and lock the lid'** below.*
4. Choose a **Smart Program** for cooking and press its button on the control panel.

   *See **'Pressure cooking Smart Programs'** below for full details.*
5. If you want to increase or decrease the cooking time exactly, press **Time** up/down arrows.
6. **Keep Warm** setting is ON by default. Press **Keep Warm** again to turn it off.
7. Press **Start**. After 10 seconds, the display shows **On** and the Instant Pot RIO is building pressure.

It can take 10–15 minutes to reach the pressure setting for cooking. Frozen foods increase the preheating time.

Cook

1. When the pressure is ready, your Instant Pot RIO starts cooking .
2. The cooking timer starts counting down.
3. When the timer reaches 00:00, cooking stops.

*You can press **Cancel** to stop a Smart Program at any time.*

Release steam

Choose from the steam release method that works for your recipe.

*See **'How to release steam'** below for full details.*

Using liquid to create steam

Pressure cooking requires liquid in the cooking pot to produce the steam needed. Depending on the size of your Instant Pot RIO, here are the minimum amounts you'll need:

Instant Pot Size	Minimum Liquid for Pressure Cooking*
6 Quarts / 5.7 Litres	1 1/2 cups (12 oz / 375 mL)

**Unless otherwise specified in recipe.*

Pressure cooking liquids should be water-based, such as broth, stock, soup or juice. If using canned, condensed, or cream-based soup, add water as directed above.

How to close and lock the lid

For pressure cooking, the lid must be securely locked into place to prevent steam from escaping. When you place the lid on the cooker base. The Instant Pot RIO will not start pressurizing unless the lid is locked.

1. Line up the ▼ on the lid with the ⬮ at the side of the control panel.

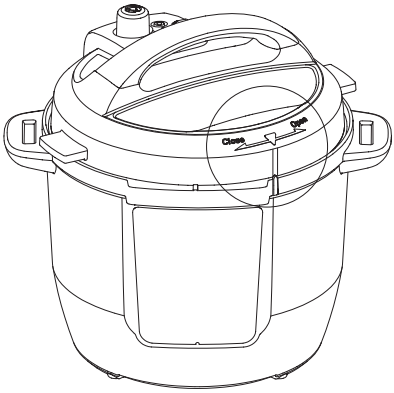

2. Turn the lid clockwise until the ▼ on the lid is centered over the control panel.

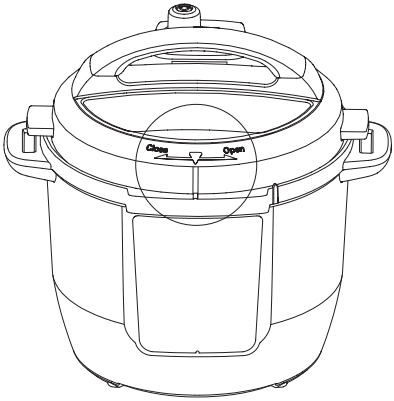

How to release steam

Instant Pot RIO can release steam in 2 different ways. Use the one that best fits the type of food you're cooking.

Natural steam release

Releases steam gradually over time (up to 40 minutes or more) as after cooking stops.

Use for: Foods that can simmer, like stews, chili, pasta, oatmeal, beans and grains.

1. After cooking, leave steam release switch in **Seal** position until all pressure is released.

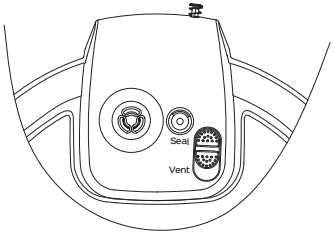

2. Float valve drops into lid when all steam is released.
3. After steam release, turn lid counterclockwise and remove the lid.

Quick steam release

Quickly releases steam after you press the steam release switch.

Use for: Foods that tend to overcook, like vegetables and seafood.

1. After cooking, set steam release switch to **Vent** position and wait for all pressure to release.

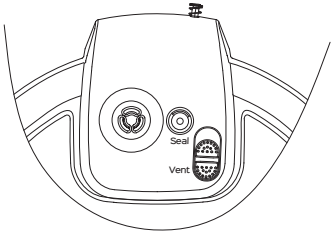

2. Float valve drops into lid when all steam is released.
3. After steam release, turn lid counterclockwise and remove the lid.

You can insert the handle into the cooking base vertically for easy storage.

⚠ CAUTION

This appliance uses pressure to cook. Allow the appliance to release all excess pressure and steam before opening the lid. Opening the lid before pressure is released may result in burns, personal injury and/or property damage. Read more in the Safety, Maintenance and Warranty sections.

Pressure Cooking Smart Programs

These Smart Programs are designed to pressure cook specific types of food. You can adjust the settings as your recipe directs.

Soup/Broth

Pressure	High		
Cooking Time	Default Cook Time	Min Cook Time	Max Cook Time
	30 minutes (00:30)	0 minute (00:00)	4 hours (04:00)

Tip

The soup/broth remains clear due to a lack of boiling motion.
*Use **Natural Release** for soups with a higher starch content.*

Meat/Stew

Pressure	High		
Cooking Time	Default Cook Time	Min Cook Time	Max Cook Time
	35 minutes (00:35)	0 minute (00:00)	4 hours (04:00)

Tip

Allow meat to rest for 5–30 minutes after cooking to retain juices.

Bean/Chili

Pressure	High		
Cooking Time	Default Cook Time	Min Cook Time	Max Cook Time
	20 minutes (00:20)	0 minute (00:00)	4 hours (04:00)

Tips

*When cooking beans or legumes, always use **Natural Release** method.*
Make sure dry beans are completely submerged in water.

Rice

Pressure	High		
Cooking Time	Default Cook Time	Min Cook Time	Max Cook Time
	12 minutes (00:12)	0 minute (00:00)	1 hour (01:00)

Tips

Use a 10-minute timed steam release for fluffy rice.

Steam

Pressure	High		
Cooking Time	Default Cook Time	Min Cook Time	Max Cook Time
	10 minutes (00:10)	0 minute (00:00)	4 hours (04:00)

Tips

Use the provided silicone steam rack to elevate food above cooking liquid.

*Use **Quick Release** method to avoid overcooking food.*

Multigrain

Pressure	High		
Cooking Time	Default Cook Time	Min Cook Time	Max Cook Time
	40 minutes (00:40)	0 minute (00:00)	4 hours (04:00)

Poultry

Pressure	High		
Cooking Time	Default Cook Time	Min Cook Time	Max Cook Time
	10 minutes (00:10)	0 minute (00:00)	4 hours (04:00)

Tips

Allow meat to rest for 5–30 minutes depending on size. It will retain cooking juices for tender, succulent meat.

Egg

Pressure	High		
Cooking Time	Default Cook Time	Min Cook Time	Max Cook Time
	5 minutes (00:05)	0 minute (00:00)	60 minutes (1:00)

Tips

Adjust cooking time as recipe directs.

*Use **Natural Release** method when cooking foods that expand.*

SAUTÉING

Use Sauté in place of a frying or saucepan. Sautéing can deepen the flavors of your food, or can simmer, thicken or reduce sauces.

Choose from these settings in the Sauté Smart Program:

Cooking Temperature	Low/Medium/High (default is set to High)		
Cooking Time	Default Cook Time	Min Cook Time	Max Cook Time
	30 minutes (00:30)	1 minute (00:01)	1 hour (01:00)

How to sauté

Prep

Cut, chop, season or marinate your ingredients according to your recipe.

Preheat

1. Place the cooking pot into the cooker base.
2. Add ingredients to the cooking pot.
3. Press **Sauté** on the control panel.
4. The default temperature is highlighted. Press **Temp up/down** arrows to select **Low, Medium** or **High** temperature.
5. The default cooking time will flash on the display. Press **Time up/down** arrows to adjust cooking time.
6. Press **Start**. The display shows **On**.

Cook

1. When display shows **Hot**, add ingredients.
2. The display will begin counting down the time.
3. When timer ends, display shows **End**.
4. Press **Cancel** if you want to finish cooking before timer runs out.

Deglazing

Deglazing is the process of adding a liquid to a hot pan, releasing all of the delicious, caramelized pieces stuck to the bottom.

1. Remove food from cooking pot.
2. Add water, broth, or wine.
3. Use wooden spoon or silicone spatula to loosen food stuck to bottom of the cooking pot.

Sautéing before Pressure or Slow Cooking

Quite often, you'll want to sauté foods to brown them before further cooking them.

1. Sauté ingredients.
2. Press **Cancel.**

You can deglaze the cooking pot now before switching to ***Pressure Cook*** *or* **Slow Cook** *(see Deglazing).*

3. Select from the Smart Program.

SLOW COOKING

Slow Cook lets you make your favorite simmering and stewing recipes – just like grandma used to make. This program does not use pressure to cook food. Make sure steam release is set to **Venting** or use a glass lid with a venting hole.

Choose from these settings in the Slow Cook Program:

Cooking Temperature	Low/Medium/High (default is set to Medium)		
Cooking Time	Default Cook Time	Min Cook Time	Max Cook Time
	6 hours (06:00)	30 minutes (00:30)	24 hours (24:00)

How to slow cook

Prep

Cut, chop, season or marinate your ingredients according to your recipe.

Cook

1. Place the cooking pot into the cooker base.
2. Add ingredients to the cooking pot.
3. Place the lid on top of the cooking pot and be sure it is locked.

   *See **'How to close and lock the lid'** above.*
4. Press **Slow Cook** on the control panel.
5. The default temperature is highlighted. Press **Temp up/down** arrows to select **Low, Medium** or **High** temperature.
6. The default cooking time will flash on the display. Press **Time up/down** arrows to adjust cooking time.
7. Press **Start**. The display shows **On**.

Keep Warm

When cooking completes, the display shows **End** if **Keep Warm** is turned off. If not, the timer begins counting from **00:00** up to 10 hours (**10:00**).

YOGURT

You can use your Instant Pot RIO to easily make delicious, fermented dairy and non-dairy yogurt. Yogurt does not use pressure to cook food.

We recommend following a trusted recipe when making yogurt. You can find recipes at **www.instantpot.com**.

Choose from these settings in the Yogurt smart program:

Step	Temperature	Default Cook Time	Min Time	Max Time
Pasteurization	High	3 minutes	Not adjustable	Not adjustable
Fermentation	Medium or Low	8 hours (follow trusted recipe)	30 minutes	99 hours, 30 minutes

Temperature settings

When you follow a recipe for making yogurt, it's helpful to know what the actual temperature settings are.

Temp Level	Temperature
High	177–185° F / 81–85° C
Medium	100–107° F / 38–42° C
Low	87–95° F / 31–35° C

Other settings

- Keep Warm is not available.
- Delay Start is not available.

You'll need:

- Milk: whole milk recommended for creaminess
- Starter culture: use a commercial starter or a small amount of plain yogurt with "live active cultures" (follow a trusted recipe)
- Instant-read thermometer (for accuracy)

How to make yogurt

Pasteurizing Milk

1. Add milk to the cooking pot and place the cooking pot into the multi-cooker base.
2. Place the lid on top of the multi-cooker base and lock the lid. Make sure the Steam Release is set to **Vent**.
3. Press **Yogurt**. The temperature setting displays.
4. Press **Temp up** arrow or **Temp down** arrow to select **High** temperature. The display will show **boiL**. You cannot adjust the cooking time.
5. Press **Start**. The display shows **ON** and the Progress Indicator shows **Preheat**. When the pot has reached the correct temperature, the display flashes **Hot**, then **boiL** and the Progress Indicator shows **Cook**.
6. When pasteurization is finished, the display shows **End**. The milk has reached the temperature for pasteurization to occur.
7. Remove the lid and allow the pasteurized milk to cool.

Note: To speed up cooling, place the cooking pot in ice water for 10 to 15 minutes, stirring occasionally.

Adding Starter Culture

1. Use the thermometer to check that the pasteurized milk has cooled to 110–115°F / 43–46°C.
2. Add a starter culture to the milk according to the recipe instructions.
3. Place the lid back on the multi-cooker base.

Ferment

Follow a trusted recipe, since time and temperature settings affect the taste and texture of the yogurt.

1. Press **Yogurt**. The temperature setting displays.
2. Press **Temp up** arrow or **Temp down** arrow to select **Low** or **Medium** temperature. The cooking time setting displays.
3. Press **Time up** arrow or **Time down** arrow to select the fermentation time according to your recipe.

   You can change the fermentation time at any time during fermentation.
4. Press **Start**. The display shows **ON** and the Progress Indicator shows **Preheat**. When the pot has reached the correct temperature, the display flashes **Hot**, then displays the cooking time remaining and the Progress Indicator shows **Cook**.
5. When fermentation is finished, the display shows **End**.
6. Open the lid, remove the cooking pot and cover with plastic wrap or transfer the yogurt to a food storage container.
7. Place in the fridge for 4–6 hours to set and thicken. Once set, you can add flavoring and sweeteners if you want.

How much to make?

Minimum Milk Volume	Maximum Milk Volume
4 Cups (32 oz / 1000 mL)	4 Quarts (128 oz / 3.8 L)

KEEP WARM

The Keep Warm setting turns on automatically after cooking on all Smart Programs except Sauté and Yogurt. You can also use Keep Warm to reheat food.

Keep warm after cooking

1. When automatic warming begins, the timer shows the time passed, up to 10 hours.
2. To turn automatic warming off (either during cooking or during automatic warming), press **Keep Warm** or **Cancel** and the light above the button turns off.

Reheat and keep warm

1. When in Standby mode, press **Keep Warm**.
2. Press Temp up/down arrows to select **Low, Medium** or **High** temperature level.
3. Press the **Time up/down** arrows to adjust the timer.

CLEANING

Clean your Instant Pot RIO after each use. Always unplug the unit and let all parts cool to room temperature before cleaning. Before use or storing, make sure all surfaces are dry.

Part	Cleaning instructions
Accessories • Steam/Egg Rack • Condensation Collector	• Wash after each use. • Hand wash with hot water and mild dish soap or wash in dishwasher, top rack. • Never use harsh chemical detergents, powders or scouring pads on accessories. • Empty and rinse condensation collector after each use.
Lid and Parts • Anti-Block Shield • Sealing Ring • Steam Release Valve • Float Valve • Silicone Cap	• Hand wash with hot water and mild dish soap or wash in dishwasher, top rack. • Remove all small parts from lid before washing. • With steam release valve and anti-block shield removed, clean interior of steam release pipe to prevent clogging. • To drain water from the lid after dishwashing, grasp the lid handle and hold the lid vertically over a sink, then turn it all the way around. • After cleaning, store the lid upside down on the cooker base. • Store sealing rings in a well-ventilated area to disperse odor. • To eliminate odors from sealing ring, add 1 cup (8 oz / 250 mL) water and 1 cup (8 oz / 250 mL) white vinegar to cooking pot, and run Pressure Cook for 5–10 minutes, then use Quick Steam Release.
Cooking pot	• Wash after each use. • Hand wash with hot water and mild dish soap or wash in dishwasher*. • Hard water stains may need a vinegar-dampened sponge and scrubbing to remove. • For tough or burned food residue, soak in hot water for a few hours before cleaning. • Dry all exterior surfaces before placing in cooker base.

Part	Cleaning instructions
Power cord	• Use a barely-damp cloth to wipe any particles off cord. Always disconnect from power source before cleaning power cord.
Cooker base	• Wipe the inside of the cooker base as well as the condensation rim with a barely-damp cloth, and allow to air dry. • Clean the outside of the cooker base and the control panel with a soft, barely-damp cloth or sponge.

**Some discoloration may occur after machine washing, but this will not affect the cooker's safety or performance.*

TROUBLESHOOTING

Problem	Cause	Solution
Difficulty closing lid	Sealing ring not properly installed.	Reposition sealing ring, ensure it is snug behind sealing ring rack.
	Contents in cooker are still hot.	Set Steam Release switch to Vent, then lower lid onto cooker base.
	Pressure inside the cooker.	Release pressure according to recipe; only open lid after float valve has dropped down.
Cooking pot is stuck to lid when cooking is complete	Cooling of pot may create suction, causing pot to adhere to the lid.	To release the vacuum, set Steam Release to Vent.
Steam leaks from side of lid	No sealing ring in lid.	Install sealing ring.
	Sealing ring damaged or not properly installed.	Replace sealing ring.
	Food debris attached to sealing ring.	Remove sealing ring and clean thoroughly.
	Lid not closed properly	Open, then close lid.
	Sealing ring rack is warped or off-center.	Remove sealing ring from lid, check sealing ring rack for bends or warps. Contact Consumer Care.
	Cooking pot rim may be misshapen.	Check for deformation and contact Consumer Care.
Minor steam leaking/ hissing from steam release vent during cooking cycle	Cooker is regulating excess pressure.	This is normal; no action required.
Steam gushes from steam release vent when Steam Release switch is in Seal position	Pressure sensor control failure.	Contact Consumer Care.
	Internal Steam Release valve not seated properly	Move the Steam Release switch quickly to Vent then back to Seal to ensure the Steam Release valve is seated correctly.

Problem	Cause	Solution
Display remains blank after plugging in the power cord	Bad power connection or no power.	Inspect power cord for damage. If damage is noticed, contact Consumer Care. Check outlet to ensure it is powered.
	Cooker's electrical fuse has blown.	Contact Consumer Care.
Occasional clicking or light cracking sound	The sound of power switching and expanding pressure board when changing temperatures.	This is normal; no action needed.
	Bottom of the cooking pot is wet.	Wipe exterior surfaces of cooking pot. Ensure heating element is dry before inserting cooking pot into multi-cooker base.
Error code appears on display and multi-cooker beeps continuously	There is an issue with the multi-cooker.	Read "Error Codes" for instructions.

ERROR CODES

If the control panel shows an error code from this list, there is an issue with the Instant Pot RIO. Here are the actions you should take to fix the problem.

Problem	Cause	Solution
C1 C2 C6	Faulty sensor.	Contact Consumer Care.
C7 or NoPr	Heat element has failed.	Contact Consumer Care.
	Not enough liquid.	Add thin, water-based liquid to the cooking pot: 1 1/2 cups (12 oz / 375 mL)
Lid	Lid is not in the correct position for the selected program.	Open and close the lid. Do not use a lid when using Sauté.
Food burn	High temperature detected at bottom of cooking pot; multi-cooker automatically reduces temperature to avoid overheating.	Starch deposits at the bottom of the cooking pot may have blocked heat dissipation. Turn the multi-cooker off, release pressure according to the recipe, and inspect the bottom of the cooking pot.
PrSE	Pressure has accumulated during a non-pressure cooking program.	Set Steam Release switch to Vent.

REPLACEMENT PARTS

We offer genuine replacement parts for your Instant Pot RIO, if you need them. Visit **www.instantpot.com** for details.

	Part
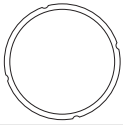	Sealing Ring
	SS Cooking Pot
	Ceramic coated AL pot
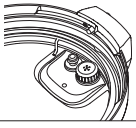	Float Valve
	Steam Release Valve
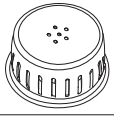	Anti Block Shield
	User Manual

In accordance with Québec Regulation O.C. 800-2025, we inform you that we do not sell or provide replacement products to repair this appliance. Certain replacement parts may be available for general maintenance only.

LEARN MORE

There's a whole world of Instant Pot cooking information and help just waiting for you. Here are some of the most helpful resources.

Register your product

Instantpot.com/register

Contact Consumer Care

In the Instant Connect™ App
Instantpot.com/customer-care-center
support@instantpot.com

Download the Instant Connect™ App

Discover guided cooking and recipes
Available at iOS and Android app stores

Cooking charts and more recipes

Instantpot.com

How-to videos, tips and more

Instantpot.com

Replacement parts and accessories

Instantpot.com

Join the community

Product specifications

Model	Volume	Wattage	Power
DUPC601XXXXX	6 Quarts 5.7 Litres	1000 W	120V ~ 60Hz
RIPC61-BK	6 Quarts 5.7 Litres	1000 W	120V ~ 60Hz

WARRANTY

One (1) Year Limited Warranty

This One (1) Year Limited Warranty applies to purchases made one year from the purchase date or delivery date, whichever is later, from authorized retailers of Instant Pot Brands by the original appliance owner and is not transferable. Proof of original purchase date and, if requested by Instant Pot Brands, return of your appliance, is required to obtain service under this Limited Warranty. Provided the appliance was used in accordance with the use & care instructions, Instant Pot Brands will, in its sole and exclusive discretion, either: (i) repair defects in materials or workmanship; or (ii) replace the appliance. In the event that your appliance is replaced, the Limited Warranty on the replacement appliance will expire twelve (12) months from the date of receipt. Failure to register your product will not reduce your warranty rights. The liability of Instant Pot Brands, if any, for any allegedly defective appliance or part will not exceed the purchase price of a comparable replacement appliance.

What is not covered by this warranty?

- Products purchased, used, or operated outside of the United States and Canada.
- Products that have been modified or attempted to be modified.
- Damage resulting from accident, alteration, misuse, abuse, neglect, unreasonable use, use contrary to the operating instructions, normal wear and tear, commercial use, improper assembly, disassembly, failure to provide reasonable and necessary maintenance, fire, flood, acts of God, or repair by anyone unless directed by an Instant Pot Brands representative.
- Use of unauthorized parts and accessories.
- Incidental and consequential damages.
- The cost of repair or replacement under these excluded circumstances.

EXCEPT AS EXPRESSLY PROVIDED HEREIN AND TO THE EXTENT PERMITTED BY APPLICABLE LAW, INSTANT POT BRANDS MAKES NO WARRANTIES, CONDITIONS OR REPRESENTATIONS, EXPRESS OR IMPLIED, BY STATUTE, USAGE, CUSTOM OF TRADE OR OTHERWISE WITH RESPECT TO THE APPLIANCES OR PARTS COVERED BY THIS WARRANTY, INCLUDING BUT NOT LIMITED TO, WARRANTIES, CONDITIONS, OR REPRESENTATIONS OF WORKMANSHIP, MERCHANTABILITY, MERCHANTABLE QUALITY, FITNESS FOR A PARTICULAR PURPOSE OR DURABILITY.

Some states or provinces do not allow for: (1) the exclusion of implied warranties of merchantability or fitness; (2) limitations on how long an implied warranty lasts; and/or (3) the exclusion or limitation of incidental or consequential damages; so these limitations may not apply to you. In these states and provinces, you have only the implied warranties that are expressly required to be provided in accordance with applicable law. The limitations of warranties, liability, and remedies apply to the maximum extent permitted by law. This limited warranty gives you specific legal rights, and you may also have other rights which vary from state to state or province to province.

Product Registration

Please visit **www.instantpot.com/register** to register your new Instant Pot Brands appliance. Failure to register your product will not diminish your warranty rights. You will be asked to provide the store name, date of purchase, model number (found on the back of your appliance) and serial number (found on the bottom of your appliance) along with your name and email address. The registration will enable us to keep you up to date with product developments and recipes, and contact you in the unlikely event of a product safety notification. By registering, you acknowledge that you have read and understand the instructions for use, and warnings set forth in the accompanying instructions.

Warranty Service

To obtain warranty service, please contact our Consumer Care Department by email to **support@instantpot.com**. You can also create a support ticket online at **www.instantpot.com**. If we are unable to resolve the problem, you may be asked to send your appliance to the Service Department for quality inspection. Instant Pot Brands is not responsible for shipping costs related to warranty service. When returning your appliance, please include your name, mailing address, email address, phone number, and proof of the original purchase date as well as a description of the problem you are encountering with the appliance.

⚠WARNING

DO NOT place this appliance on or close to a gas or electric burner, or inside an oven. NEVER use on your stove. Always operate this appliance on a stable, non-combustible, level surface, such as a kitchen countertop.

In Canada, distributed by
Instant Pot Brands
199 Bay Street, Suite 4000
Toronto, ON M5L 1A9 Canada

In U.S., distributed by
Instant Pot Brands
8725 W Higgins Road, Suite 725
Chicago, IL 60631 U.S.

instantpot.com

© 2026 Instant Pot Brands

399-1255-03US

Art release date
06/23/2026

INSTANT POT
is a registered trademark
of Instant Pot Brands